G-3752
SOLAR Series

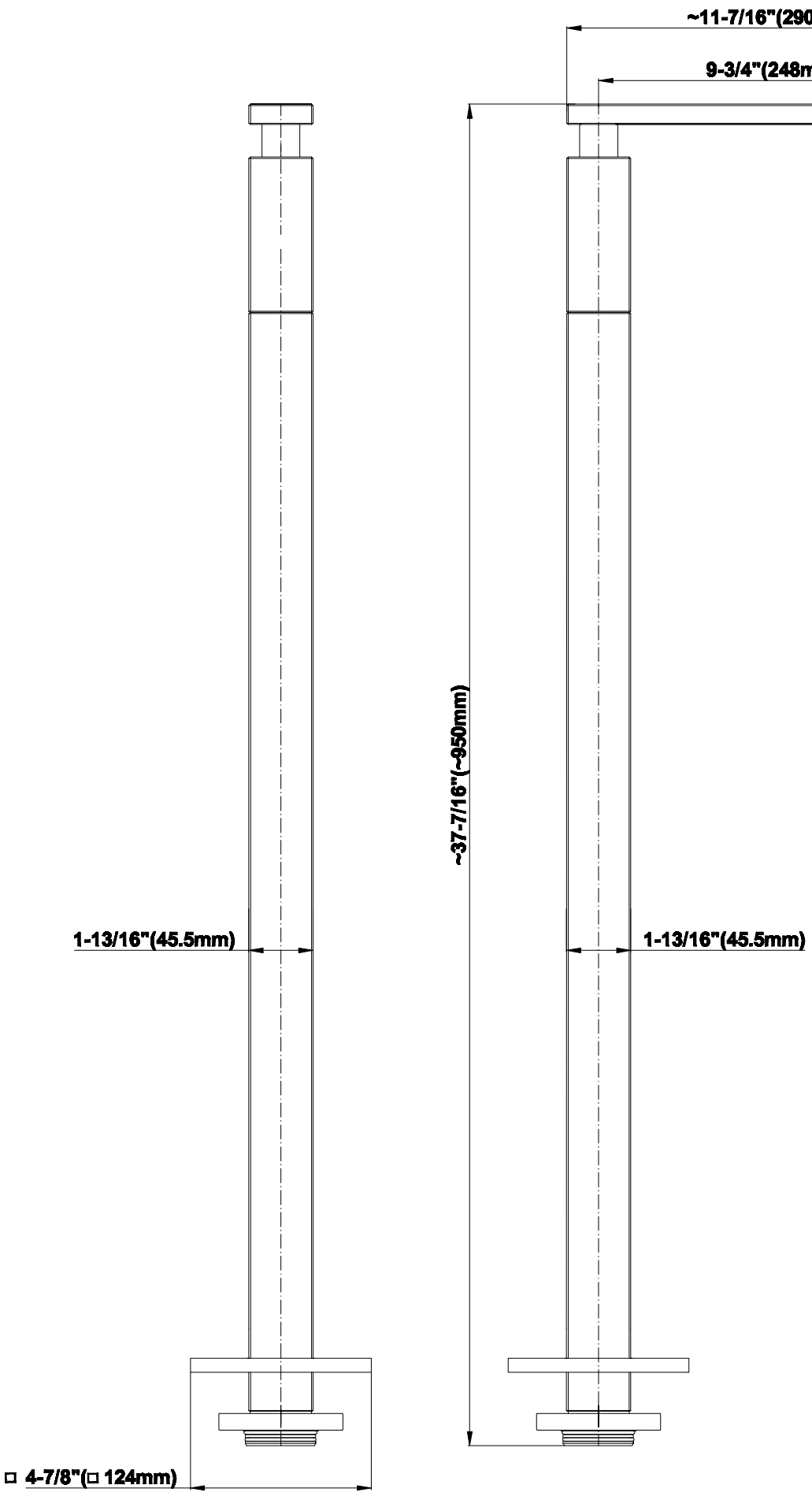

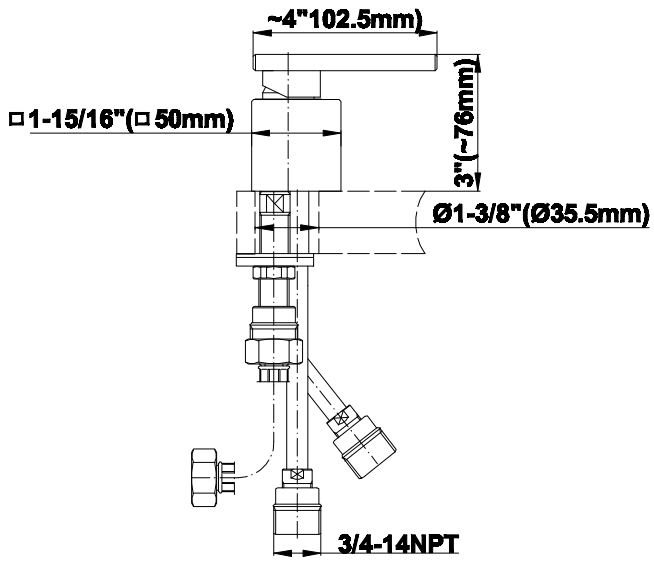

GRAFF®
CUTTING EDGE DESIGN