PHYLRICH®

Defining Luxury Since 1959

Pressure Balance Tub and Shower Set

D2102

TECHNICAL DETAILS

ADA Compliance: Yes
Access Hole Diameter: 5”
Handle Turn Angle: 115°
Spout Reach: 7 1/4“
Type of Connection: Female 1/2” NPT Connection
Installation Type: Wall Mounted
Primary Material: Brass
Valve Material: Ceramic
Shower Flow Restriction: 1.8 GPM
Spout Flow Restriction: Full Flow
Water Pressure Maximum: 85 PSI
Water Pressure Minimum: 20 PSI
Water Pressure Recommended: 60 PSI

PRODUCT FEATURES

- Style: Traditional
- Collection: Revere & Savannah
- Temperature Controlled By Pressure Balance

CODES & STANDARDS

ASME A112.181/ CSA B1251, ASME 112.18.2/ CSA B125.2, ANSI NSF, CEC, Watersense 61 Sect. 9, State of MA.

WARRANTY

Mechanical Warranty: 10 Years from date of purchase.
Finish Warranty: See catalog for further information.

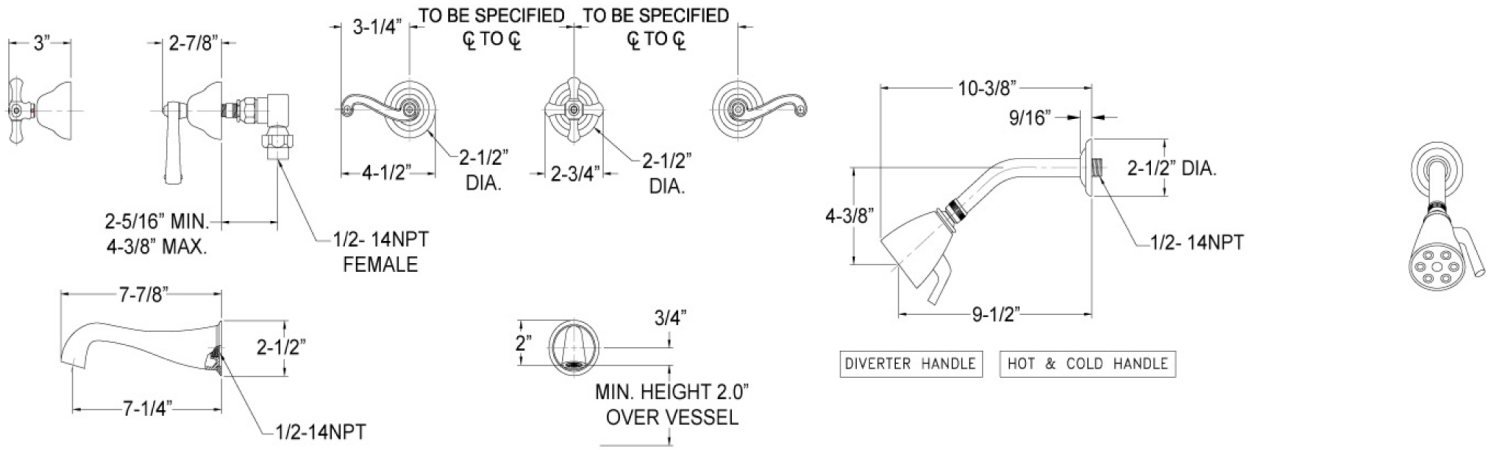

1261 Logan Avenue, Costa Mesa, California 92626. Phone: 714.361.4800 Fax: 714.617.3120
customer.service@phylrich.com