G-6310-LM59B

Sento Series

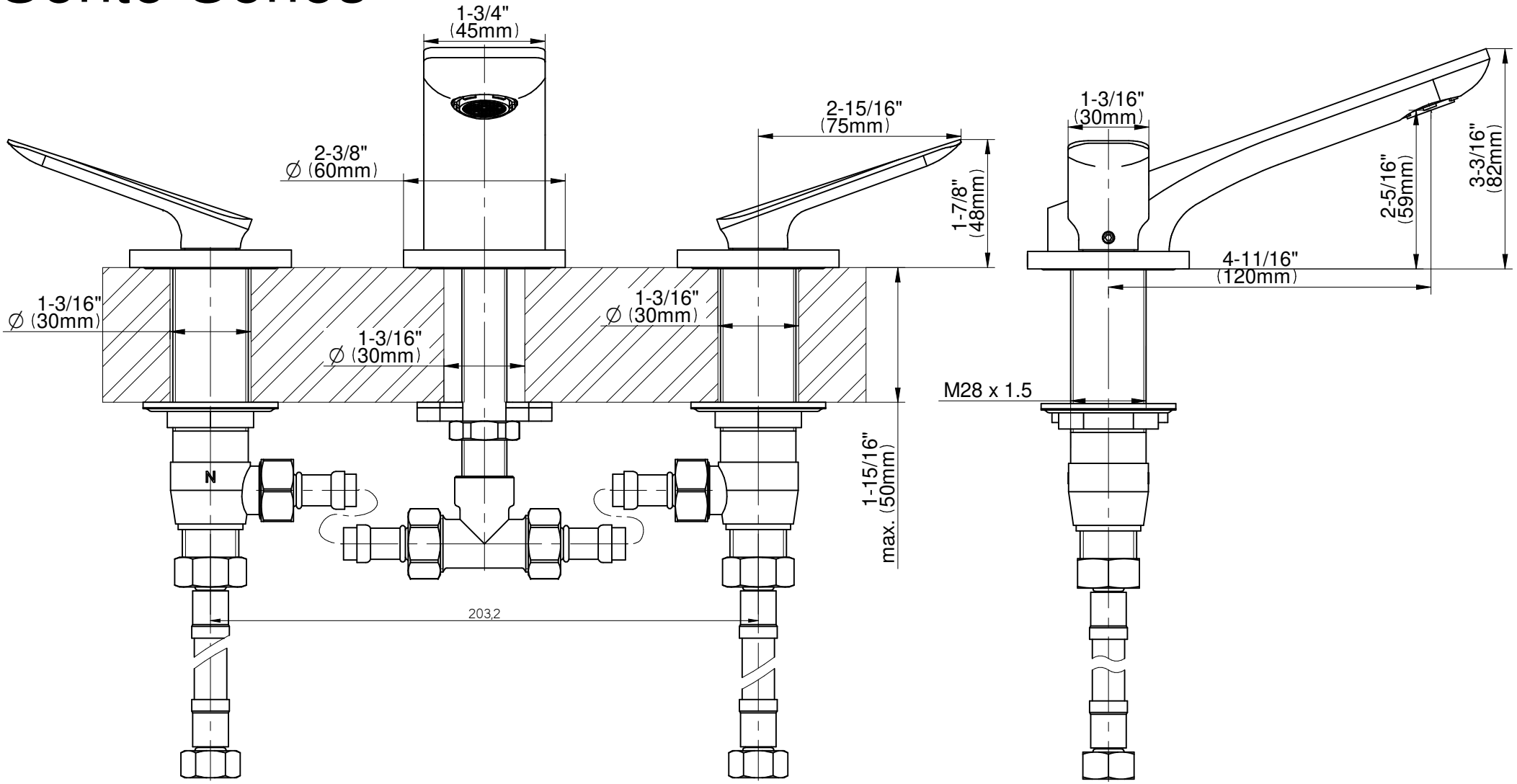

GRAFF®

CUTTING EDGE DESIGN