isenberg
innovation+design

ECOMATIC™
Made For Responsible Luxury

Serie 240™

240.2411 | 3-Hole Deck Mounted Roman Tub Filler

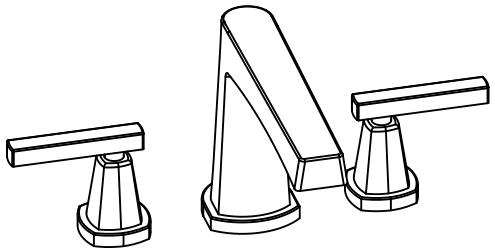

SPECIFICATIONS:

- Solid Brass construction
- Three Hole Installation
- Flow Rate = 11.0 GPM @ 60 PSI
- Ceramic disc cartridge allows volume control

STANDARDS:

- ASME A112.18.1 / CSA B125.1

Legislation Compliance

ZeroDrip Technology

Technical Diagram

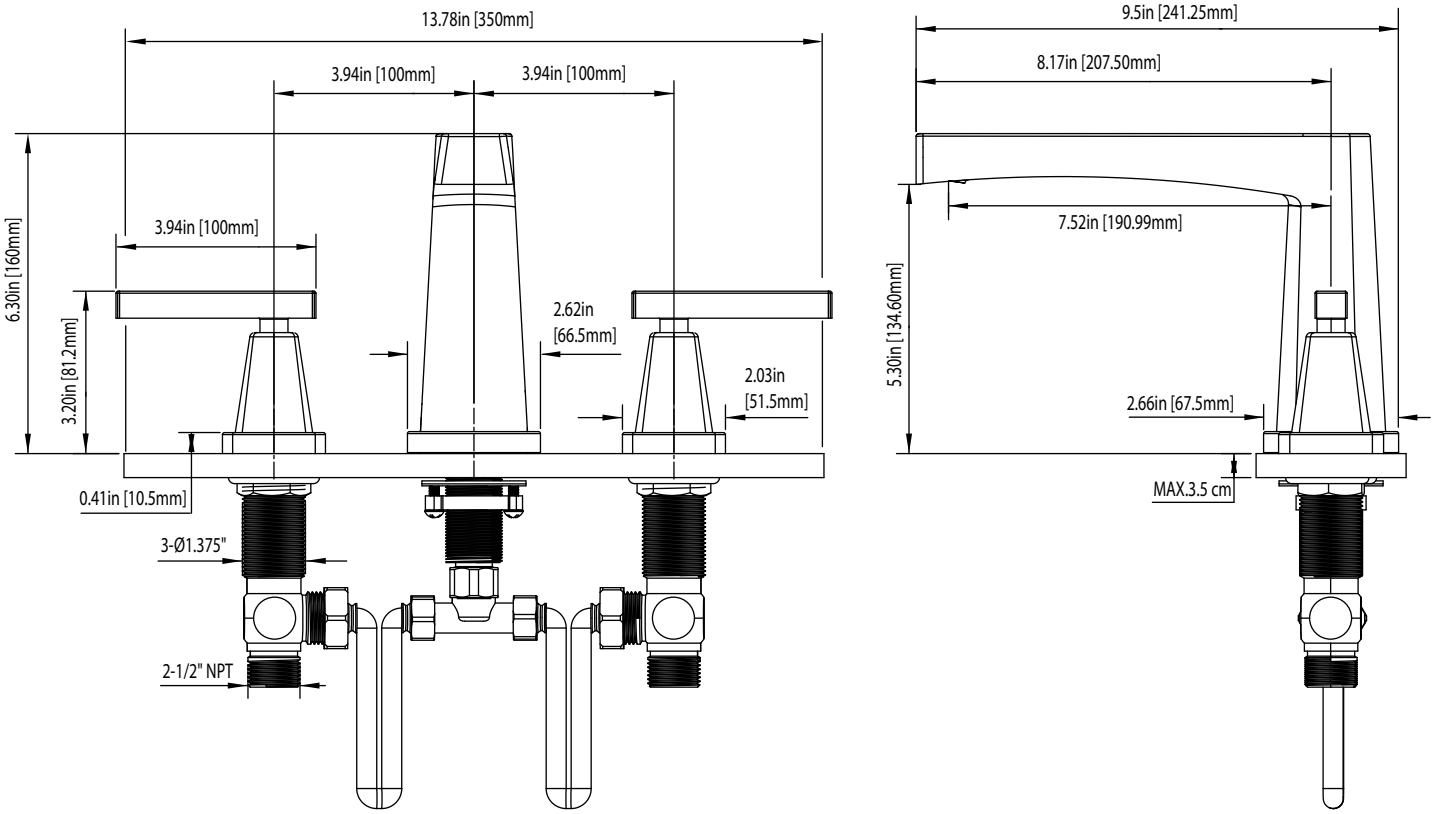

Critical Dimensions in Inches [mm]