HS8027-Wall Elbow With Holder Installation
Installation Manual

isenberg
innovation+design

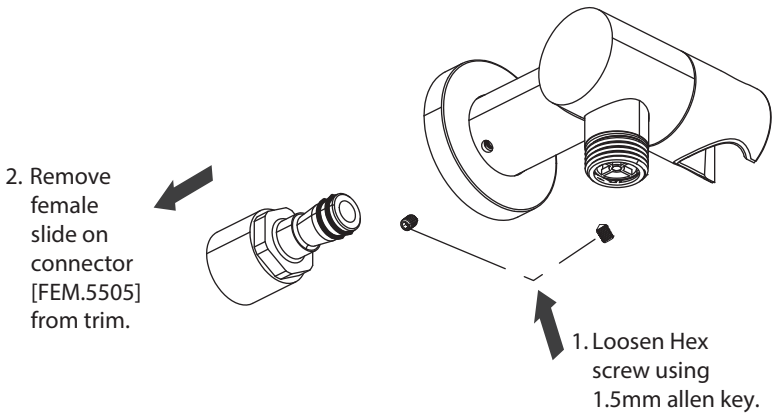

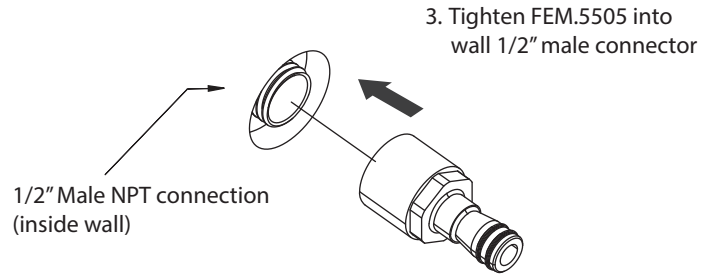

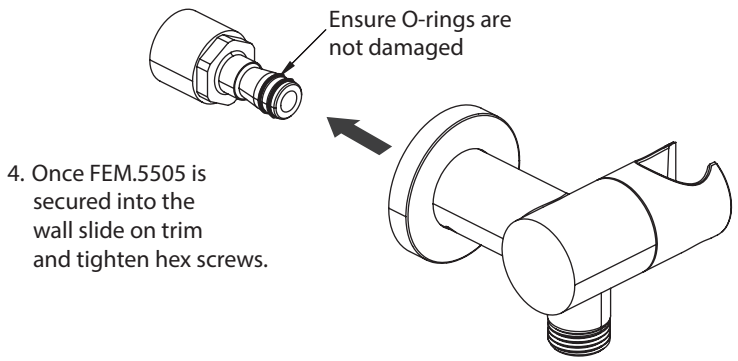

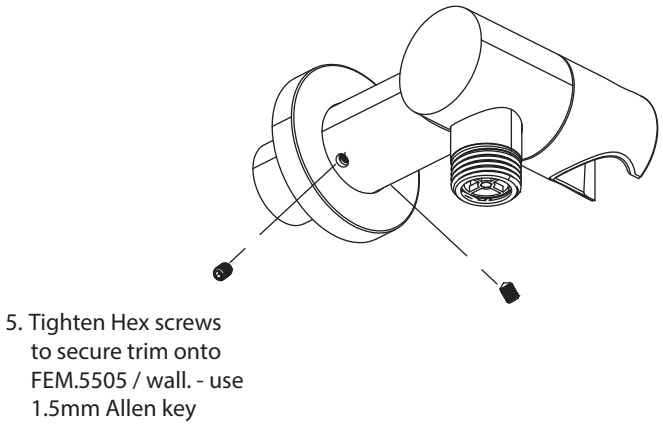

Ver 2.53