Product Parts Breakdown

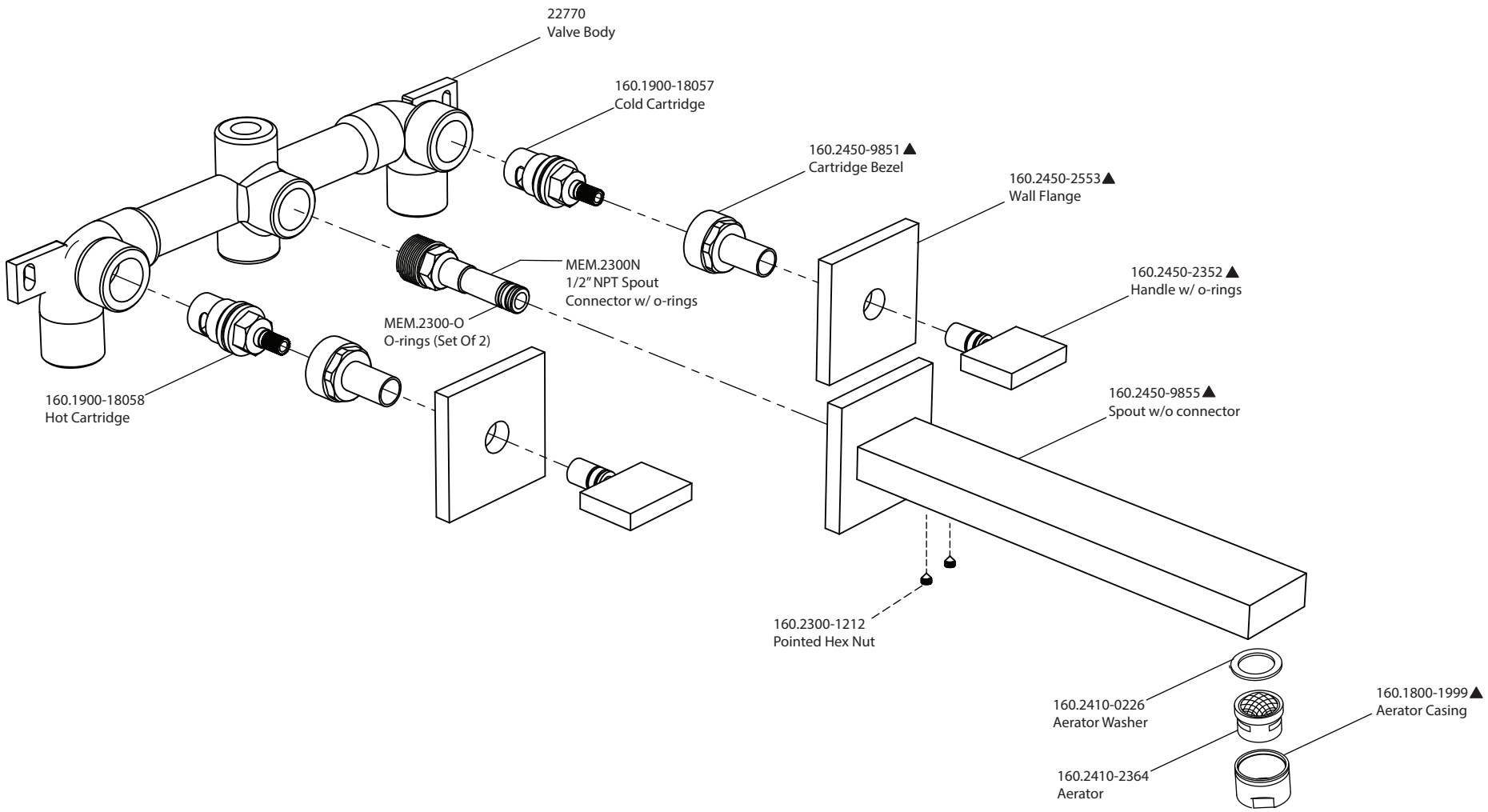

isenberg
innovation+design

160.2450

Ver 2.59