Installation Guide

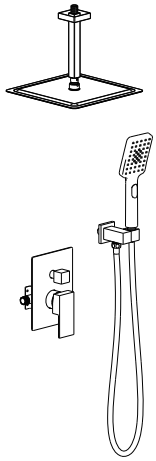

Cube
KSF412

www.kibiusa.com

Before Installation

⚠ CAUTION

Failure to read these instructions prior to installation may result in personal injury, property damage, or product failure. Manufacturer assumes no responsibility for product failure due to improper installation.

STOP DO NOT RETURN TO STORE

If you have any trouble, contact us before reaching out to the retailer. we'll make it right. Our customer service team will be glad to assist you with any assembly, missing part or questions that you may have about your products.

Contact KIBI 855-883-0888 support@kibiusa.com www.kibiusa.com

PRIOR TO INSTALLATION

1- For best results, we recommends that this unit be installed by a licensed, professional plumber.
2- Please read over these instructions thoroughly before beginning installation. Make sure that you have all tools and supplies needed to complete the installation.
3- Please flush the water system to ensure that no metal swarf, solder, and other impurities can enter the faucet that might damage the cartirdge. (Most of the leakages and water flow issues are from avoilding this very necessary step).
4- Turn off the hot and cold water lines at the angle valve and turn on the old faucet to release any built-up pressure.
5- Keep this booklet and the receipt (or other proof of date and place of purchase) for this product in a safe place. The receipt is required should it be necessary to request warranty parts.
6- Please keep the box and packaging materials until your product is completely installed and functional.

Cleaning and Care

Clean the faucet often with a soft cloth to keep it looking like new. For heavy cleaning you can use mild liquid detergents or non-abrasive liquid polisher. Rinse with water and dry with a soft cloth. Avoid abrasive cleaners, steel wool and harsh chemicals as these will dull the finish and void your warranty.

Tools you may need

Drill

Safety Glasses

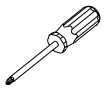
Phillips Screwdriver

Wrench

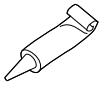
Silicone sealant

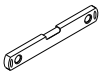
Level

Pencil

Plumbers Tape

Tape Measure

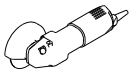
Angle Grinder

Installation Schematics

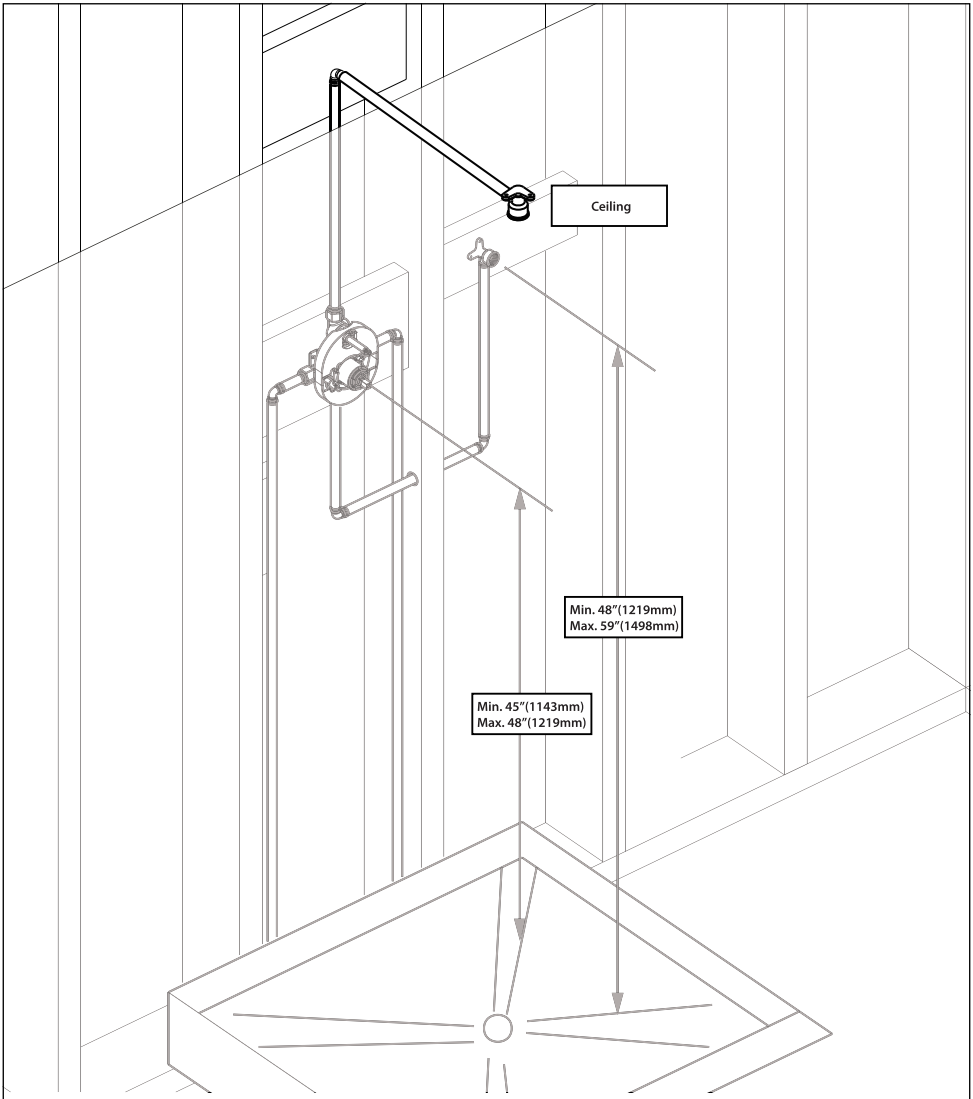

Installation Schematics – Measuring for Ideal Tub/Shower Performance.
Installation of this product at non-recommended measurements may lead to issues such as water discharge from the showerhead during tub fill mode.

Position the valve body 45-48 inches from the floor of the tub basin. (Follow valve instruction for proper valve body installation).

The shower arm should be positioned on the ceiling based on the layout of the shower area to determine its optimal location. (Follow shower arm instruction for proper threaded adapter installation).

The hand shower should be placed 48-59 inches above the floor. (Follow hand shower holder instruction for proper threaded adapter installation).

Dimensions

Critical dimensions show in mm

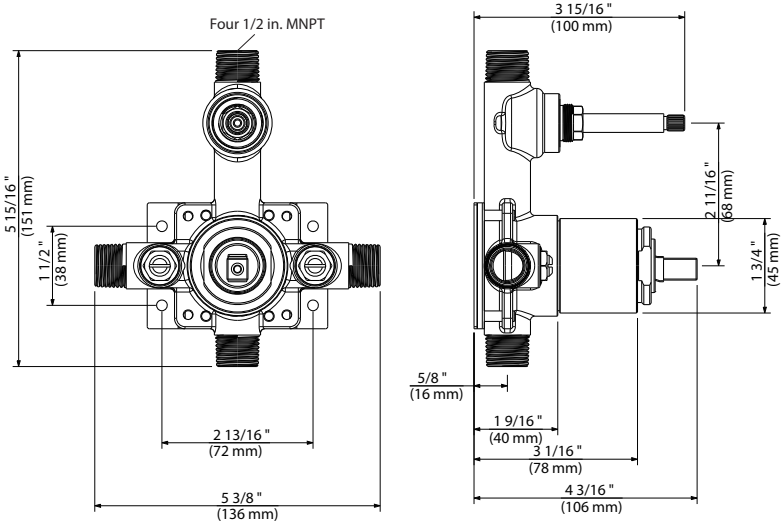

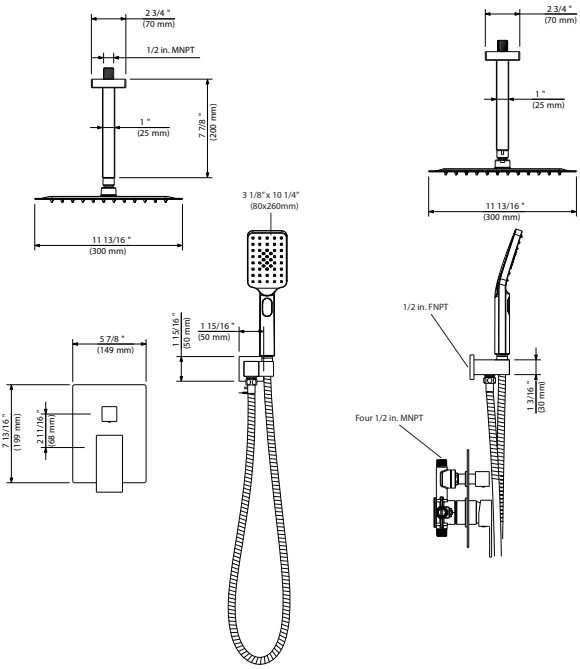

Parts List

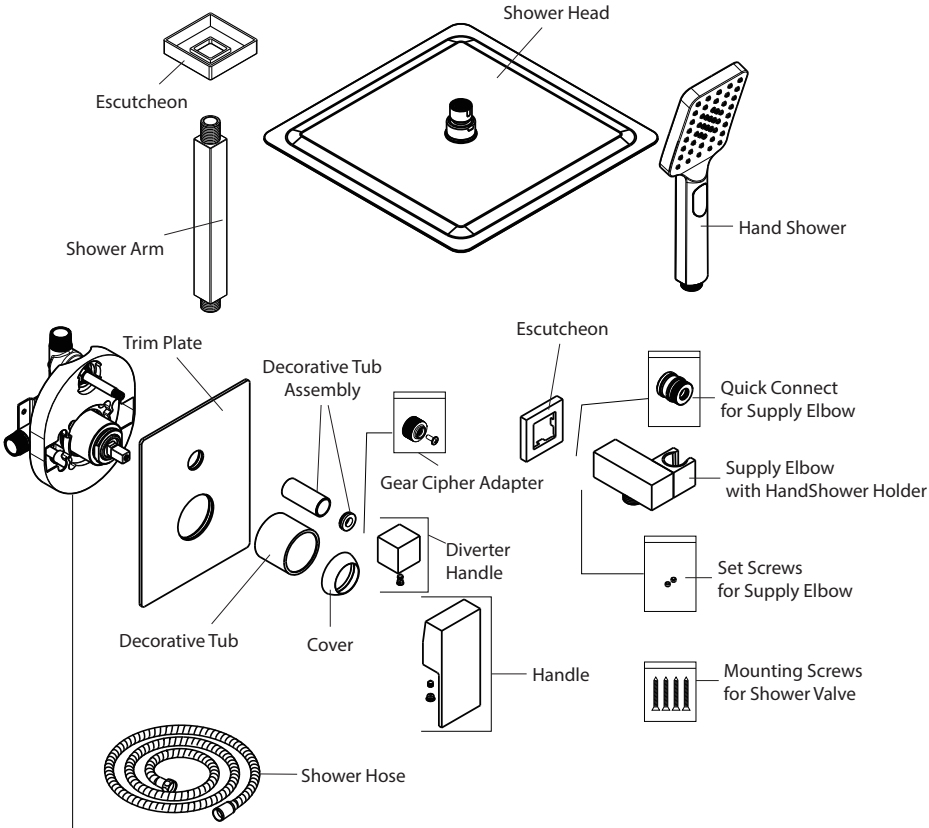
Shower Head
Escutcheon
Shower Arm
Hand Shower
Trim Plate
Decorative Tub Assembly
Escutcheon
Quick Connect for Supply Elbow
Gear Cipher Adapter
Supply Elbow with HandShower Holder
Diverter Handle
Set Screws for Supply Elbow
Decorative Tub
Cover
Handle
Mounting Screws for Shower Valve
Shower Hose

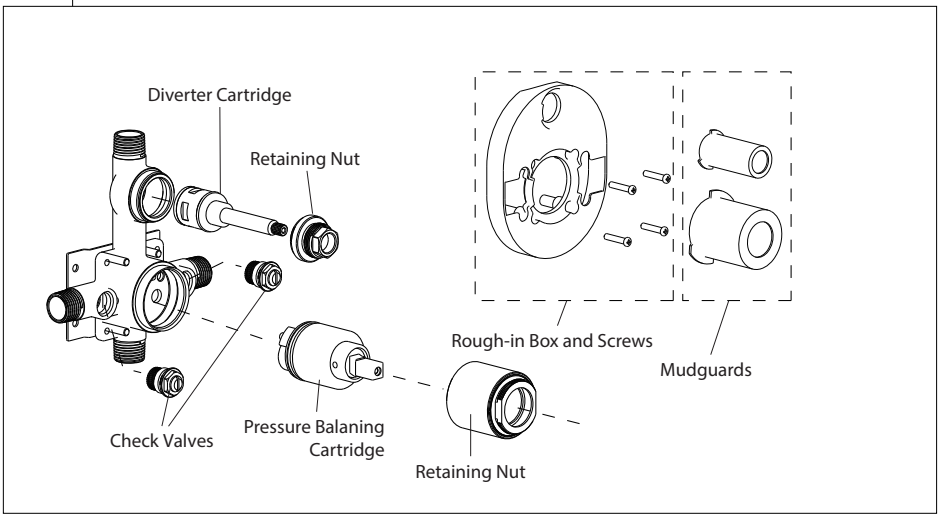
Diverter Cartridge
Retaining Nut
Rough-in Box and Screws
Mudguards
Check Valves
Pressure Balaning Cartridge
Retaining Nut

Valve Installation Instructions

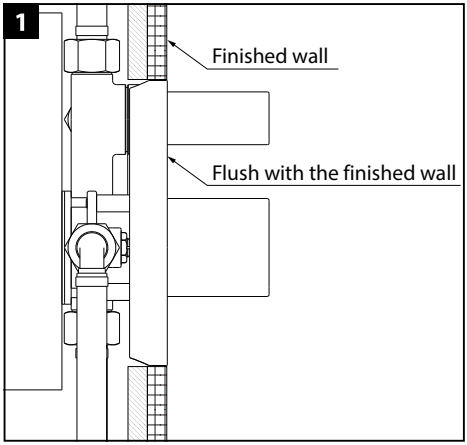

SHUT OFF WATER SUPPLIES. Consider the type and thickness of your finished wall before placing your stringer back plate.

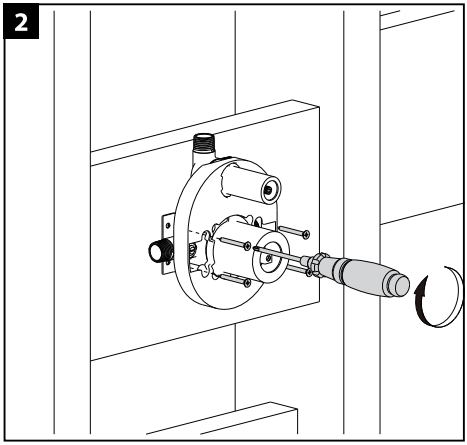

Install the body so the surface of the finished wall is flush with the front of the rough-in box. Make sure the word "UP" are on top of the valve body when installing.

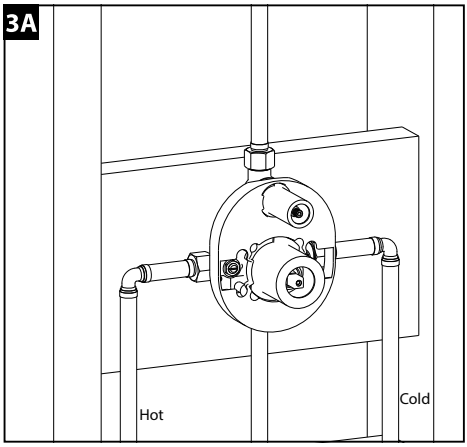

Connect the valve body to water supplies using proper fittings (copper tubing, iron pipe or PEX).
Note: For PEX, be sure to use the right fitting for crimping and the right tool for cold expansion.

Note: Left is the hot inlet port and right is the cold inlet port.
If you are making a back-to-back or reverse installation (hot on the right and the cold on left) install the valve body as described, but the water supply lines will be reversed.
Note: Right is the hot inlet port and left is the cold inlet port.

Valve Installation Instructions

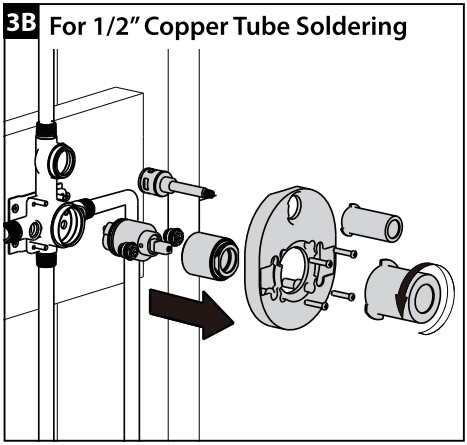

Solder water supply tube to the valve body.
Note: Prior to soldering remove check stops, pressure balancing cartridge and diverter cartridge. Remove check stops by loosening hex nut counterclockwise. Remove the pressure balancing cartridge and diverter cartridge by unscrewing retaining nut with an adjustable wrench. Avoid soldering excessively at high temperature.

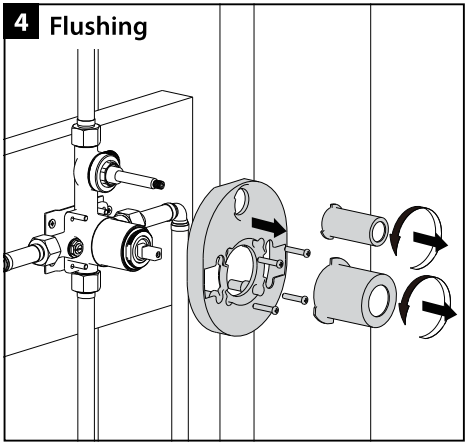

Remove two round mudguards by turning counterclosewise.
Remove the rough-in box.

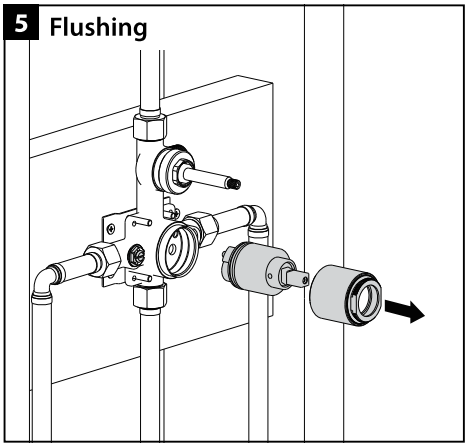

Remove pressure balancing cartridge by unscrewing retaining nut with an adjustable wrench.
Slowly turn on both hot and cold supplies and flush out the valve body and lines.
Close the check stops and reinstall the cartridge.

Valve Installation Instructions

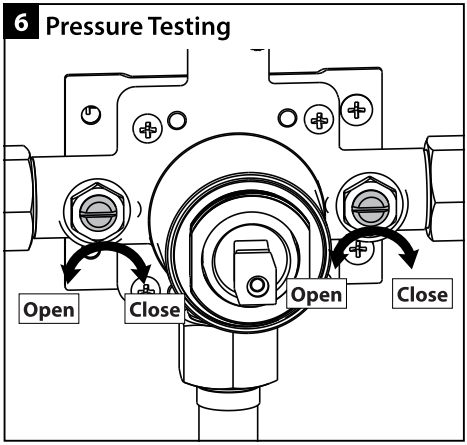

With both check stops in the fully OPEN position, turn on cold and hot water supplies and conduct a system water pressure leak test.
Note: To protect the valve, keep mudguards and rough-in box on during installation. Remove only when you are ready to install trims.

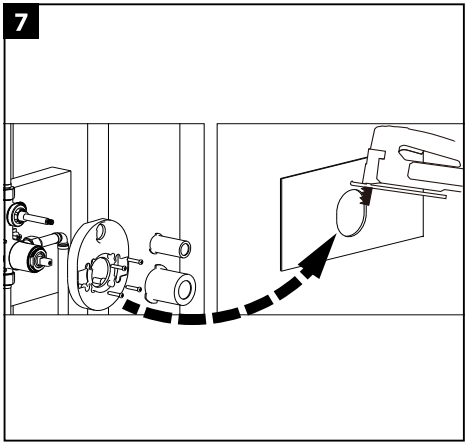

Use the rough-in box as a template to cut the wall properly.

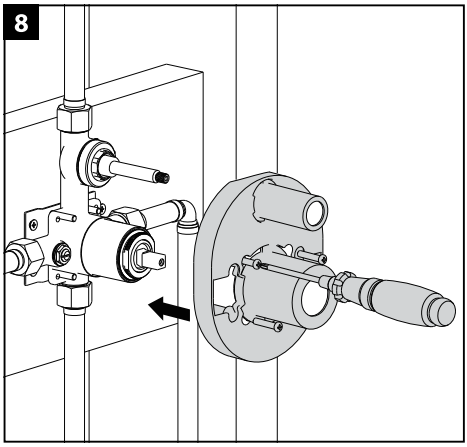

Reinstall rough-in box , two round mudguards by turning clockwise and complete the wall finish installation.
Note: In keeping with standard plumbing practices it is essential that all tub/shower systems be tested extensively for leaks before the finishing wall, (tile, etc.) is completed. Also ensure that the check stops are exposed, (not covered by tile, boarding etc.) under the removable trim plate. The trim plate should completely cover the rough-in opening when attached. (Having access to these stops allow you to stop the water flow to your shower system without turning off the water to the rest of the bathroom or home.)

Trim Installation Instructions

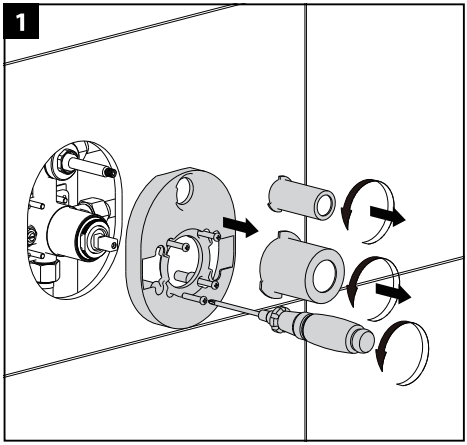

Remove two round mud guards by turning counter-closewise and discard.
Remove the rough-in box and discard.

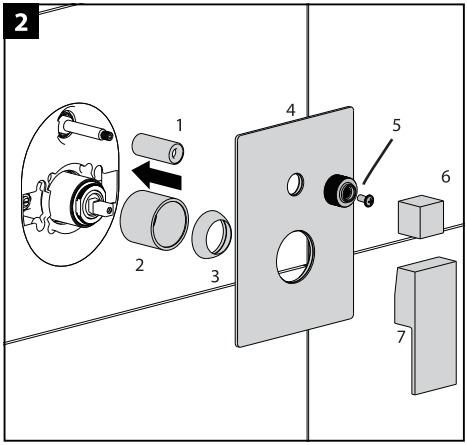

Screw small decorative tube(1) over the diverter valve and slide large decorative tube(2) and cartridge cover(3) onto the pressure balancing valve.
Use water to wet the round rubber gaskets on the cover plate(4) and slide cover plate over(4) two decorative tubes. Gently press cover plate(4) against the finished wall.
Screw the Gear Cipher Adapter(5) on the diverter cartridge.
Install cartridge handle(6) and diverter handle(7). Secure by tightening set screw by using the supplied Allen Wrench. Cover the hole with the supplied plug.

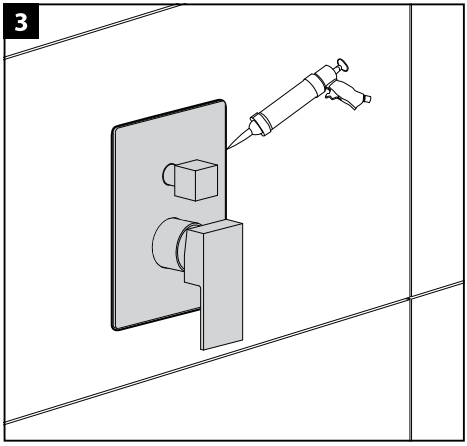

When firmly securing the trim plate onto the wall, apply a thin layer of silicone sealant around its perimeter to prevent water splashes from entering the wall.
Make sure not to apply it to the back of the trim plate, in order to avoid potential issues during future disassembly.

Cleaning and Maintenace Instructions

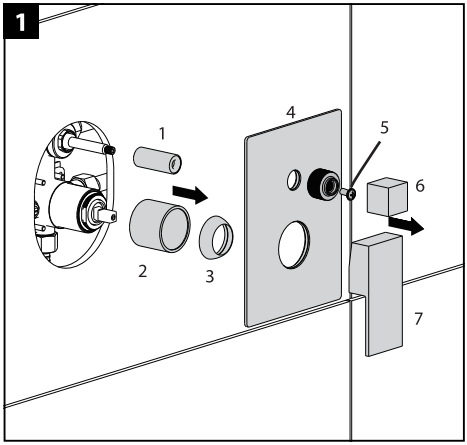

Remove cartridge handle(7), diverter handle(6) and Gear Cipher Adapter(5).
Remove the trim panel(4).
Remove the decorative ring(1) and decorative sleeve tube(2).

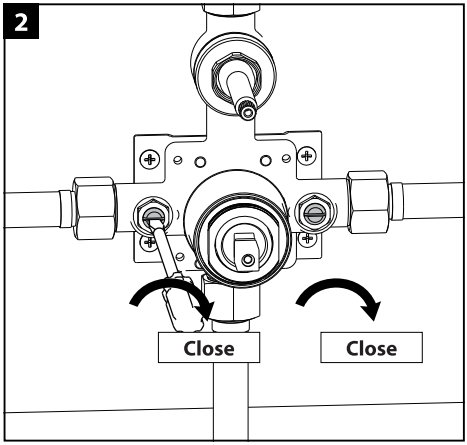

Using light force only, turn 2 check stops clockwise to close the check stops with the flat head screwdriver, until you feel resistance, the check stops are in the closed position.

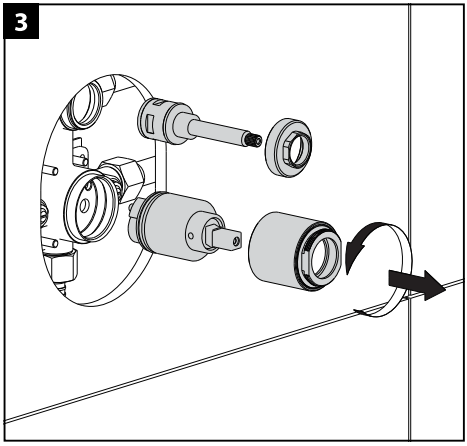

Remove the retaining nut using an adjustable wrench.
Use two fingers to grasp the stem of the cartridge and wiggle, then pull out.
Shake cartridge and ensure that a clicking sound is heard, which means the pressure balancing spool moves freely and works properly.
You may soak the cartridge in 50-50 vinegar/water mix to remove any calcium and mineral build-up.
Replace the cartridge if it is damaged.

Shower Head and Shower Arm Instructions

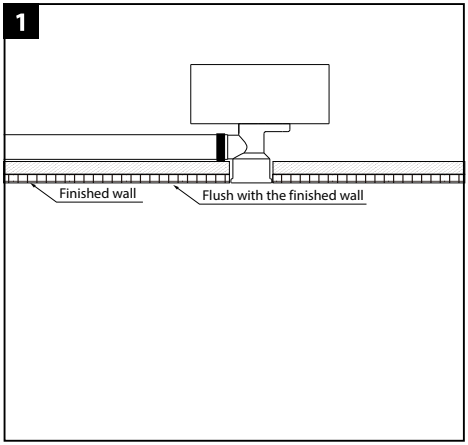

SHUT OFF WATER SUPPLIES.
Consider the type and the thickness of your finished wall before placing your stringer back plate.
Install the threaded adapter **(Not supplied)** so the surface of the finished wall is flush with the front of the threaded adapter.
Make sure that 1/2" threaded adapter is installed securely inside the wall.

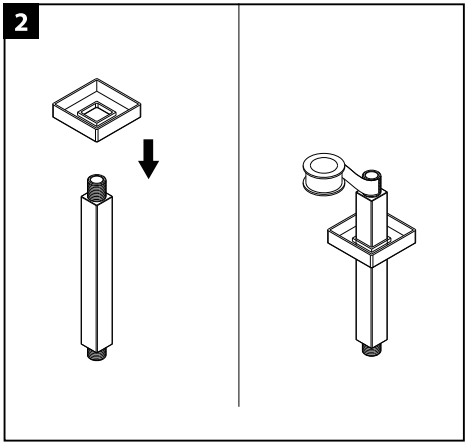

Slide escutcheon over shower arm, and apply Teflon tape onto male threads.

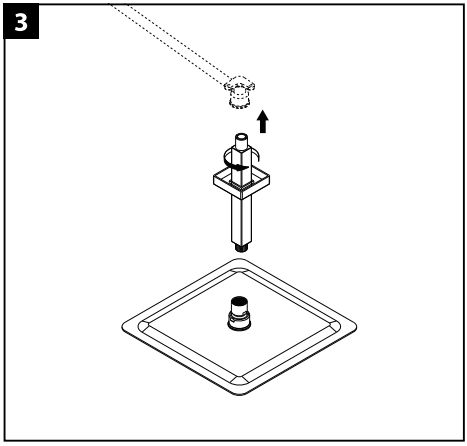

Screw the shower arm into threaded adapter.
Screw the shower head onto the shower arm and tighten with an adjustable wrench.

Hand Shower Holder Instructions

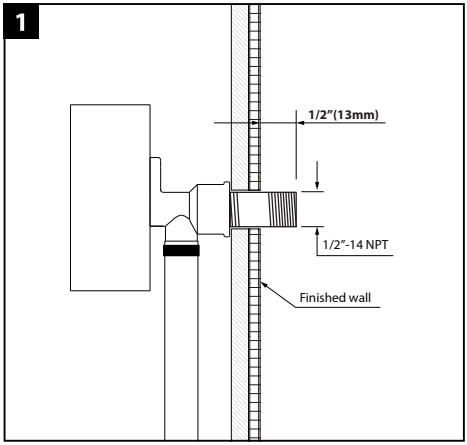

SHUT OFF WATER SUPPLIES.
Please note the wall type and thickness before positioning the stringer back plate.
Attach the 1/2" NPT nipple **(Not supplied)** in a manner that allows it to extend 1/2" (13 mm) beyond the finished wall surface.

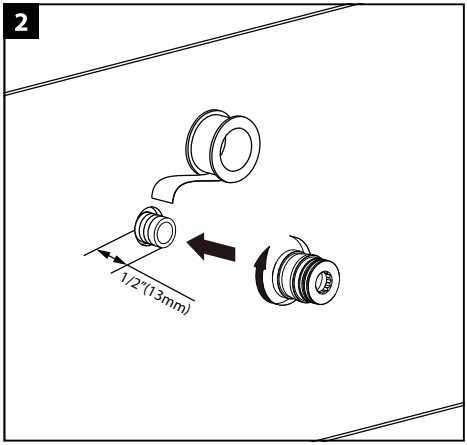

Wrap plumber's tape around the threaded ends of the 1/2" (13 mm) pipe nipple (not provided), then proceed to attach the Quick Connect onto the pipe nipple's threaded end.

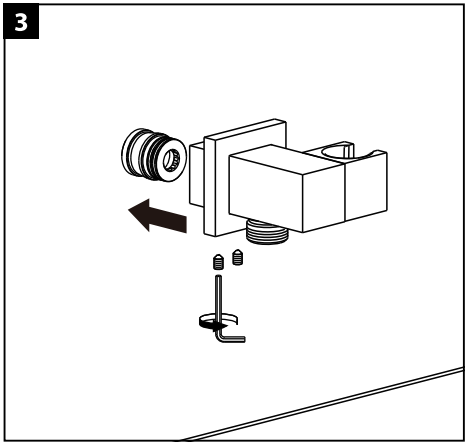

Place the escutcheon over the hand shower holder, then attach the hand shower holder to the quick connect. Secure it in place using the provided Allen key.

Limited Lifetime Warranty

Thank you for choosing Kibi USA faucets and accessories. We are dedicated to providing you with exceptional products that are built to last. Kibi USA is proud to offer a comprehensive limited lifetime warranty on our kitchen and bathroom faucets and accessories. Here are the details of our warranty policy:

Kibi USA warrants the structure and finish of the faucets and accessories to be free from defects in material and workmanship under normal usage for as long as the original purchaser resides in the residence in which the product was first installed. Additionally, the following warranty periods apply to specific components:

• Sprayhead Assembly: Kibi warrants the sprayhead assembly, including the engine, aerators, structure, restrictors, backflow preventers, sprayer hoses, and braided supply line hoses (nylon, silicon, and stainless steel), to be free from defects in material and workmanship under normal usage for a period of one (1) year from the date of purchase.

• Cartridge: Kibi warrants the faucet's cartridge to be free from defects in material and workmanship under normal usage for a period of five (5) years from the date of purchase.