Model: **K1-SF30**

30" Farmhouse Apron 16 Gauge Stainless Steel Single Bowl Kitchen Sink

SPEC SHEET

Features

- Premium T-304 16G Stainless Steel material
- 10″ deep bowl
- Sloped bottom drain with grooves
- Round 10mm corners
- Commercial grade brushed finish
- 3.5 inch real set drain
- Extra thick 3mm rubber sound dampening pads
- Full body coated
- Bottom grids, basket drainer included
- Recommended minimum cabinet size: 30″
- Limited lifetime warranty

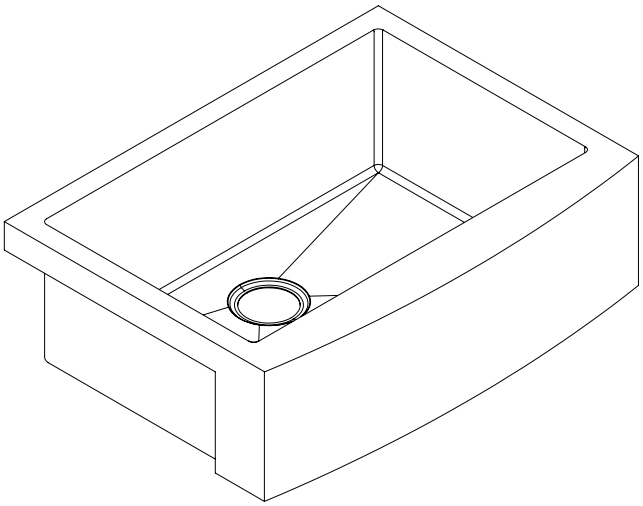

Sound Dampening

Prevents Condensation

Heat Resistant

Stain Resistant
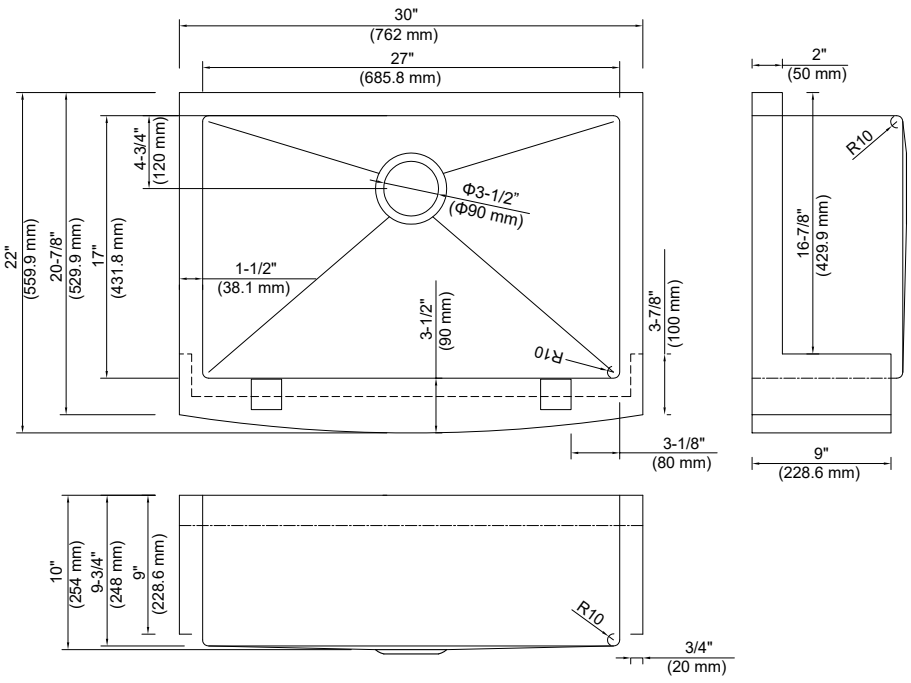
Fade Resistant