KSF-1610

Single Handle Commercial Style Pull Down Sensor Kitchen Faucet

SPECIFICATION SHEET

Faucet Dimensions
Overall Height: 18 3/4"
Spout Height: 6 1/4"
Spout Reach: 8 5/8"

Features
- Commercial Style Pull Down Sensor Faucet
- Metal Body
- ABS Sprayer
- Lead Free Braided Nylon Waterway
- 180° Swivel Spout
- Flow Rate: 1.8 gpm (6.8L/min) @ 60 psi
- Dual Function Sprayhead - Spray/Stream
- 35mm Ceramic Cartridge
- 36" Integrated Nylon Waterlines
- Sensor operated (open handle first) with 3 minute automatic shutoff
- Coin slot switch on control box to make faucet mechanical
- Dome Shaped Screen Washer
- Swivel Sprayer Connector
- Quick Weight
- Quick Connect Sprayer Hose
- 16" Hose Length
- Connections 3/8" Compression
- Max Deck Thickness: 3 1/2"
- TPI of aerator in the Sprayer - M24*1

Accessories Included
- Weight
- Hex Wrench
- Control Box
- Battery Housing
- Battery

Optional Accessories (sold separately)
- AC Adapter

Available Finishes
- Matte Black
- Spot Free Stainless Steel
- Brushed Brass
- Brushed Brass/Matte Black
- Spot Free Stainless Steel/Matte Black
- Spot Free Antique Champagne Bronze

CODES/STANDARDS:
Product Certification
cUPC (ASME A112.18.1/CSA B125.1)
NSF/ANSI Standard 61 and 372 certified by IAPMO
AB1953, MASS, FTC, DOE, CEC, ADA

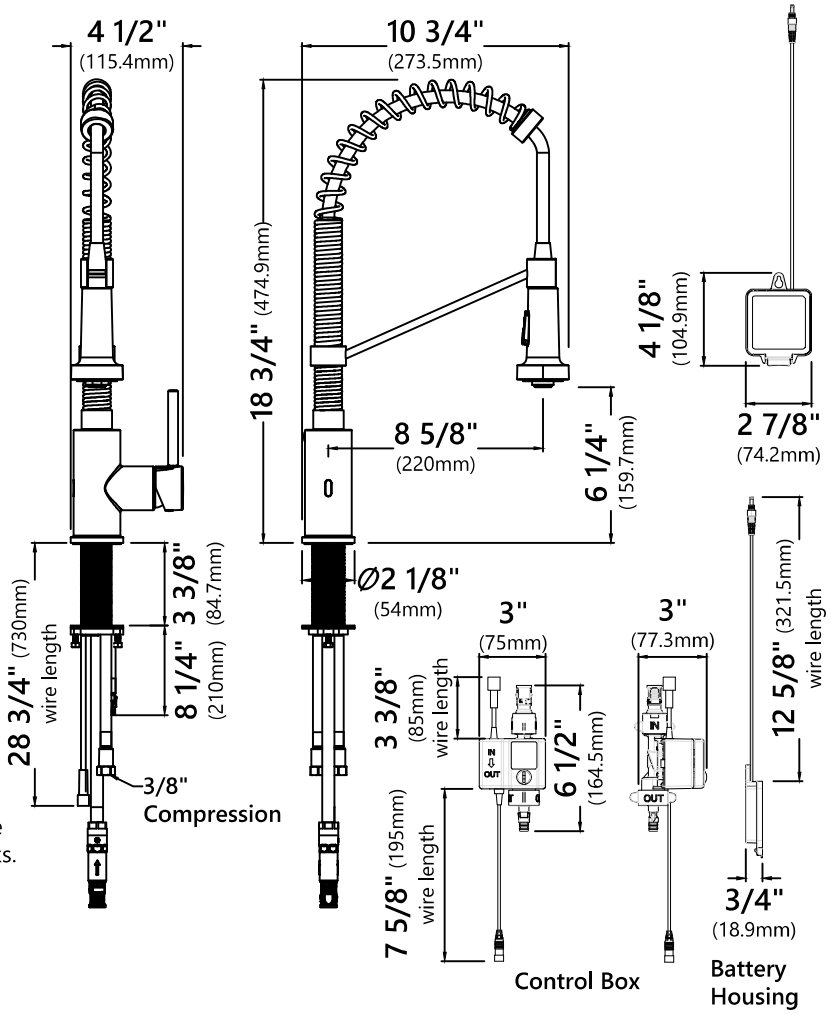

NOTE: Some Kitchen Faucets that do not have a pull out or pull down sprayer may be connected to a portable dishwasher. Pull out and pull down faucets should never be connected to portable dishwashers because potential pressure fluctuations during washing cycles cause hose ruptures or leaks.

Warranty
Kraus Limited Lifetime Warranty
see website for details **www.kraususa.com**

Kraus USA Customer Service
1.800.775.0703 | customerservice@kraususa.com

REV. June 10, 2021